RESCO TOOLS

IV 68

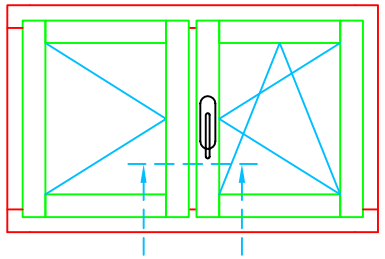

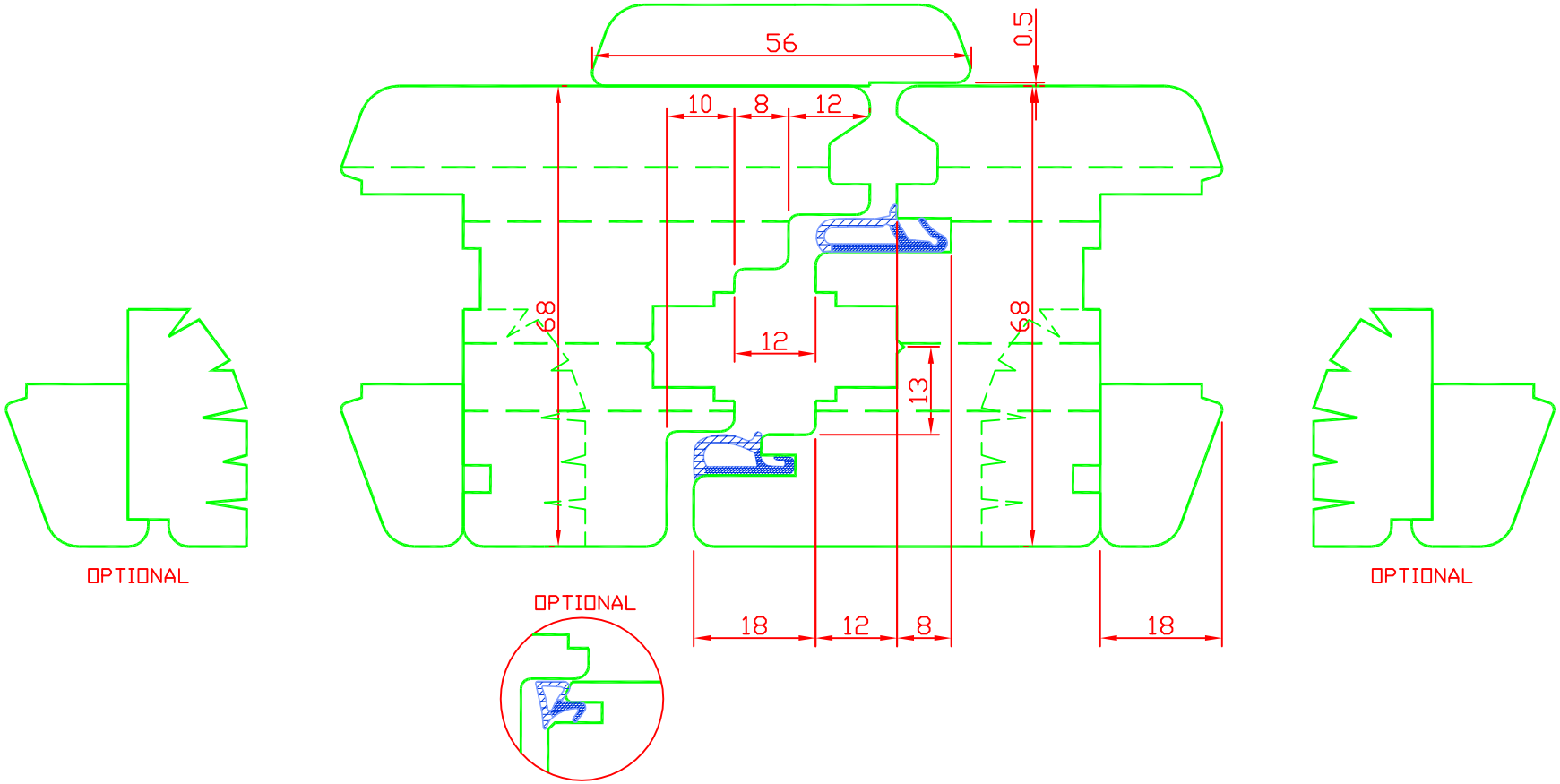

RESCO TOOLS

DIS-L5045